Nikko AMPLIFIER

NA-690

INTEGRATED AMPLIFIER

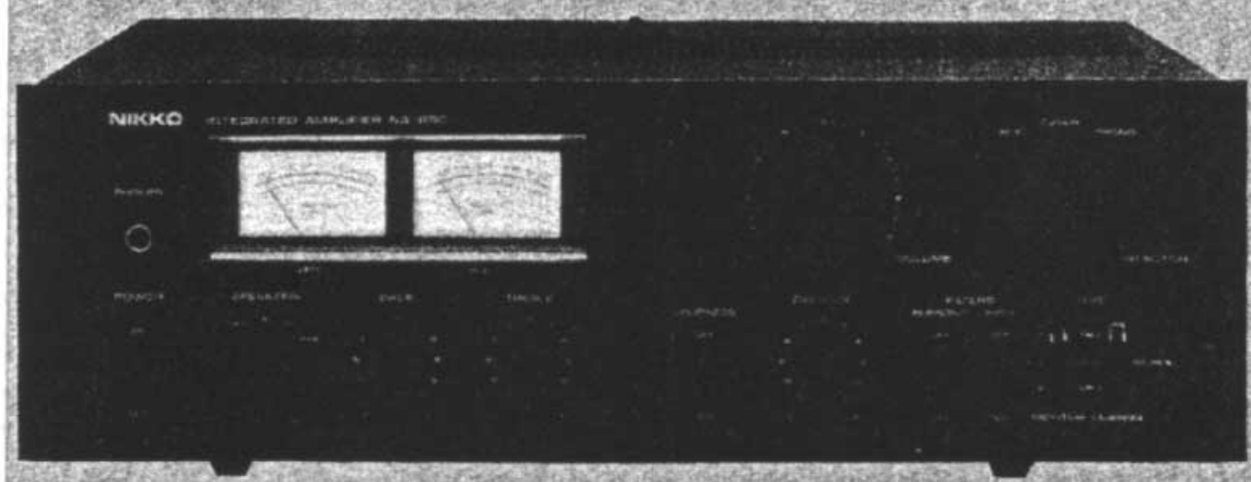

TYPE AND VOLTAGE

W-TYPE UL and CSA type	120V AC
E-TYPE NK-STD type	220/240V AC
N-TYPE DEMKO and SEMKO type	
D-TYPE DIN type	

SERVICE MANUAL

CONTENTS

SPECIFICATIONS 1, 2
BROCK DIAGRAM 2
DISASSEMBLY 3
PARTS LOCATION 4
ALIGNMENT 5
SCHEMATIC DIAGRAM 6, 7
P. C. BOARD 8, 9
PARTS LIST ..... 10 ~ 13
SEMICONDUCTOR DATA 14

www.hifiengine.com

SPECIFICATIONS

W-TYPE, E-TYPE, N-TYPE

Continuous Power Output, 8 ohm loads:
- 20 Hz – 20 KHz, @ 0.04 % THD . . . . . 45 Watts
- 1 KHz, @ 0.04 % THD . . . . . 50 Watts

TH Distortion, 8 ohm loads:
- @ Continuous Power Output . . . . . < 0.04 %
- @ 1 Watt Power Output . . . . . < 0.04 %

IM Distortion, 8 ohm loads:
- @ Continuous Power Output . . . . . < 0.04 %
- @ 1 Watt Power Output . . . . . < 0.04 %

IHF Power Bandwidth:
- @ 0.04 % THD . . . . . 10 Hz – 30 KHz

Damping Factor, 8 ohm loads, @ 1 KHz 45

Frequency Response, 8 ohm loads:
- PHONO → TAPE OUT
  . . . . . < RIAA ± 1 dB @ 30 Hz – 15 KHz
- TUNER, AUX, TAPE IN → SP. TER
  . . . . . < ± 2 dB @ 10 Hz – 30 KHz

Input Sensitivity for 45 Watts Power Output, @ 1 KHz:
- PHONO . . . . . 2.3 mV ± 2 dB
- TUNER, AUX, TAPE IN . . . . . 140 mV ± 2 dB

Phono Overload, @ 1 KHz, @ 0.1 % THD . 210 mV ± 2 dB

Output Level, @ 2.3 mV Input, @ 1 KHz:
- PHONO → TAPE OUT . . . . . 140 mV ± 2 dB

Signal to Noise Ratio, IHF "A" Network:
- PHONO . . . . . < 80 dB
- TUNER, AUX, TAPE IN . . . . . < 90 dB

Tone Control
- BASS @ 70 Hz . . . . . ± 10 ± 2 dB
- TREBLE @ 10 KHz . . . . . ± 10 ± 2 dB

High Cut Filter, @ 7 KHz . . . . . – 3 ± 2 dB

Low Cut Filter, @ 20 Hz . . . . . – 3 ± 2 dB

Loudness Control, (VOLUME: –30 dB)
- @ 70 Hz . . . . . + 10 ± 2 dB
- @ 10 KHz . . . . . + 6 ± 2 dB

Idling Current . . . . . 20^{+20}_{-10} mA

Midpoint Voltage . . . . . 0 ± 50 mV

Mute Time . . . . . 5 ± 3 Seconds

D-TYPE

Continuous Power Output, 4 ohm loads:
- 20 Hz – 20 KHz, @ 0.1 % THD . . . . . 50 Watts
- 1 KHz, @ 1 % THD . . . . . 60 Watts

TH Distortion, 4 ohm loads:
- @ Continuous Power Output . . . . . < 0.1 %
- @ 1 Watt Power Output . . . . . < 0.08 %

IM Distortion, 4 ohm loads:
- @ Continuous Power Output . . . . . < 0.1 %
- @ 1 Watt Power Output . . . . . < 0.08 %

Power Bandwidth, 4 ohm loads:
- @ 0.1 % THD . . . . . 10 Hz – 30 KHz

Damping Factor, 4 ohm loads, @ 1 KHz 45

Output Level, @ 2.3 mV Input, @ 1 KHz:
- PHONO → TAPE OUT . . . . . 15 mV ± 2 dB

Signal to Noise Ratio, DIN Filter:
- PHONO . . . . . < 60 dB
- TUNER, AUX, TAPE IN . . . . . < 80 dB

Tone Control
- BASS @ 70 Hz . . . . . ± 10 ± 2 dB
- TREBLE @ 10 KHz . . . . . ± 10 ± 2 dB

High Cut Filter @ 7 KHz . . . . . – 3 ± 2 dB

Low Cut Filter @ 20 Hz . . . . . – 3 ± 2 dB

Loudness Control, (VOLUME: – 30 dB)
- @ 70 Hz . . . . . + 10 ± 2 dB

www.hifiengine.com

Frequency Response, 4 ohm loads:

PHOTO → TAPE OUT

. . . . . < RIAA ± 1 dB 30 Hz – 15 KHz

TUNER, AUX, TAPE IN → SP. TER

. . . . . < ± 2 dB @ 10 Hz – 30 KHz

Input Sensitivity for 60 Watts Power Output, @ 1 KHz:

PHONO . . . . . 2.3 mV ± 2 dB

TUNER, AUX, TAPE IN . . . . . 140 mV ± 2 dB

Phono Overload, @ 1 KHz, @ 0.1 % THD . 210 mV ± 2 dB

Dimension

Width . . . . . 16 - 1/2 in. (420 mm)

Height . . . . . 5 - 3/8 in. (138 mm)

Depth . . . . . 13 - 1/8 in. (335 mm)

Weight . . . . . 24.2 lbs. (11 Kg)

Specifications subject to change without notice.

@ 10 KHz . . . . . + 6 ± 2 dB

Idling Current . . . . . 20 $^{+20}_{-10}$ mA

Midpoint Voltage . . . . . 0 ± 50 mV

Mute Time . . . . . 5 ± 3 Seconds

BLOCK DIAGRAM

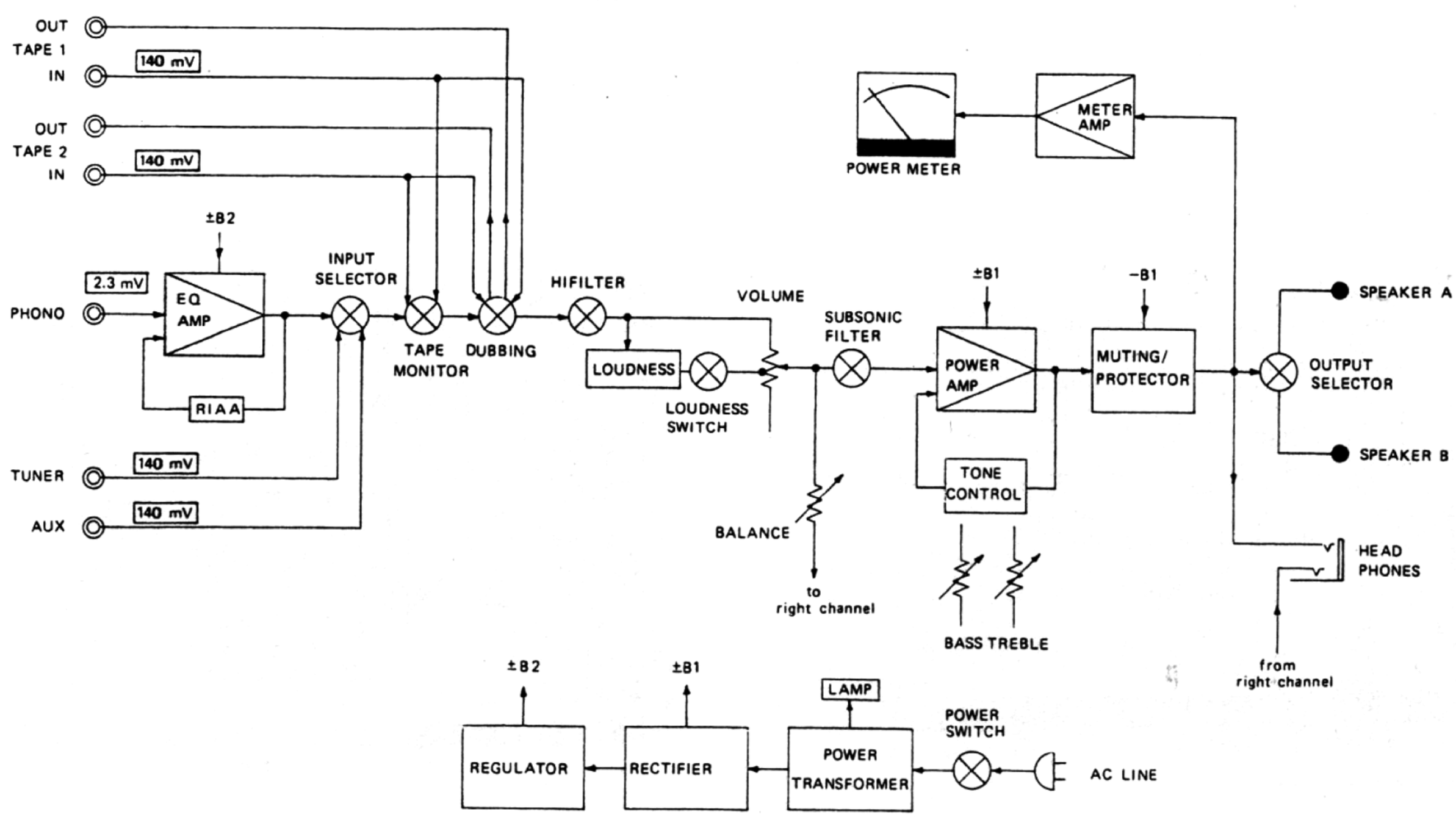

Figure 1

www.hifiengine.com

DISASSEMBLY

CABINET COVER REMOVAL

Remove three tapping screws from the top of the metal cover.
Remove six screws from both sides of the metal cover.

BOTTOM PLATE REMOVAL

Remove nine tapping screws (No. 3 ~ 11) (Photo 1) from the bottom of the unit.

FRONT PANEL REMOVAL

1. Using hexagonal wrench, remove two knobs (VOLUME, SELECTOR) from the front of the unit.
2. Remove ten knobs (POWER, SPEAKERS, BASS, TREBLE, LOUDNESS, BALANCE, SUBSONIC, HI-FILTER MONITOR, DUBBING) from the front of the unit by pulling them forward.
3. Remove four tapping screws (No. 1, 2) (Photo 1), (No. 1, 2) (Photo 2).
4. Lift the front panel away from the unit.

POWER TRANSFORMER REMOVAL

1. Disconnect all the power transformer cables.
2. Remove four screws (No. 3 ~ 6) (Photo 2) from the bottom plate.
3. Lift the power transformer away from the unit.

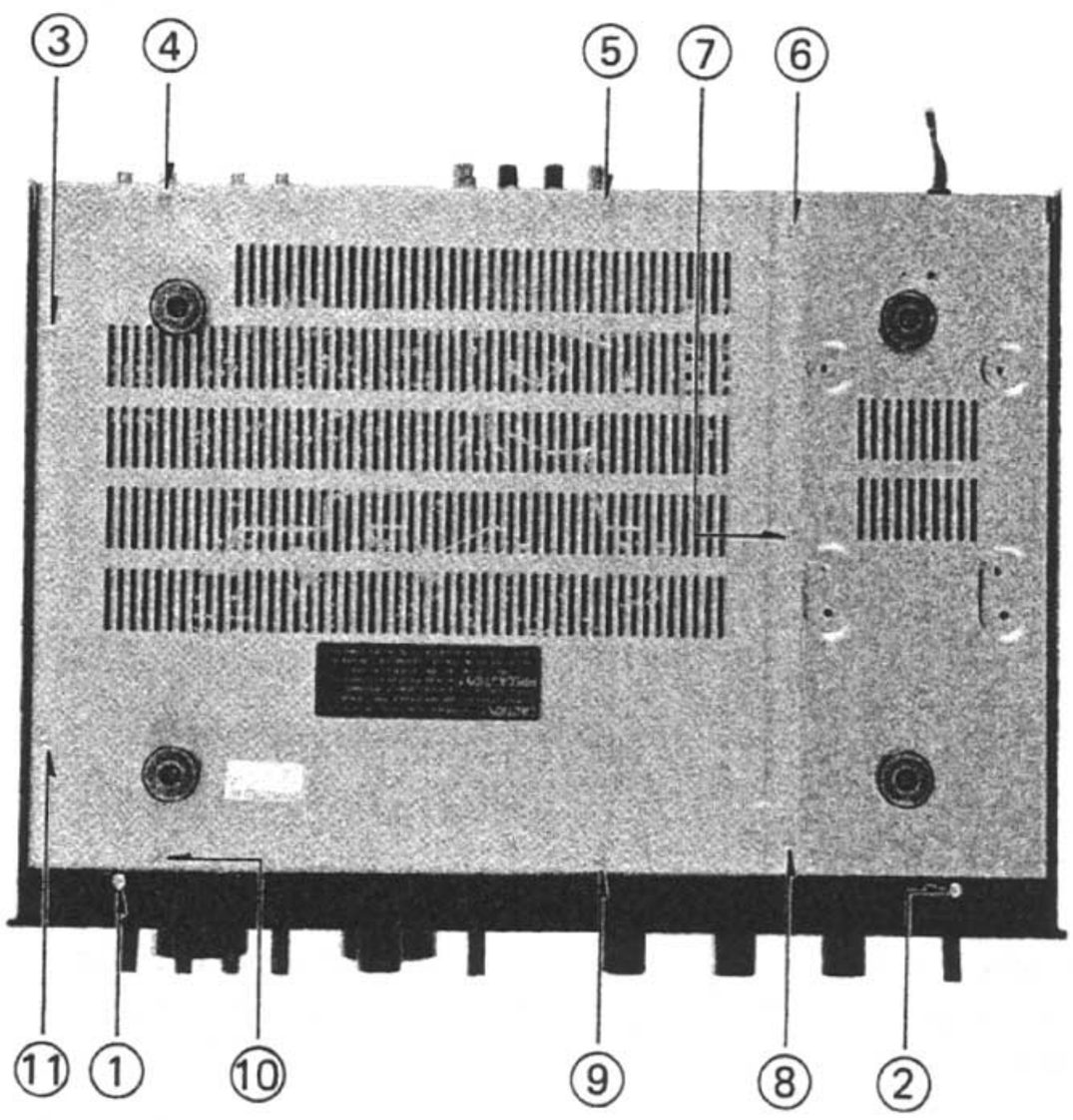

Photo 1

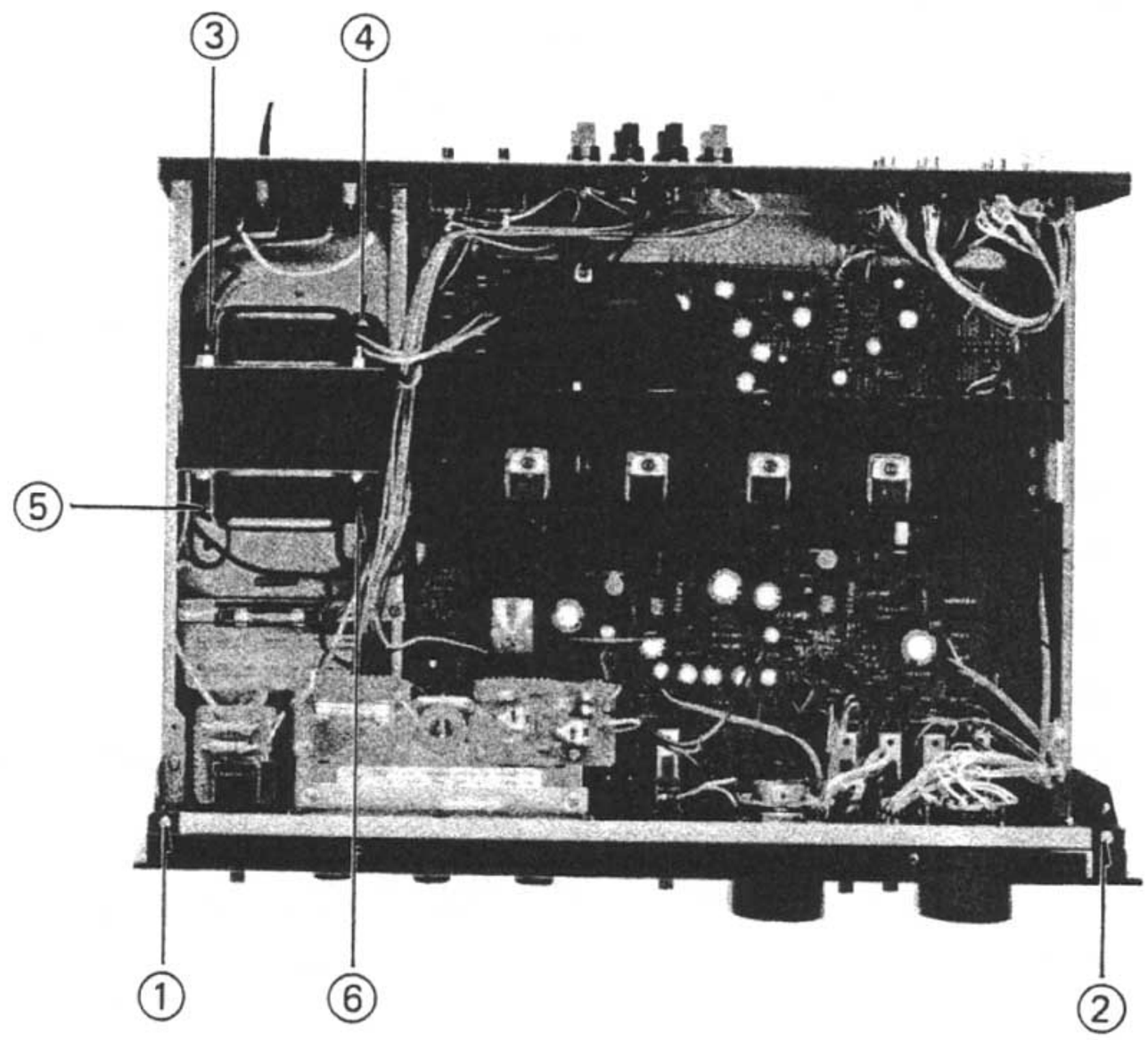

Photo 2

www.hifiengine.com

PARTS LOCATION

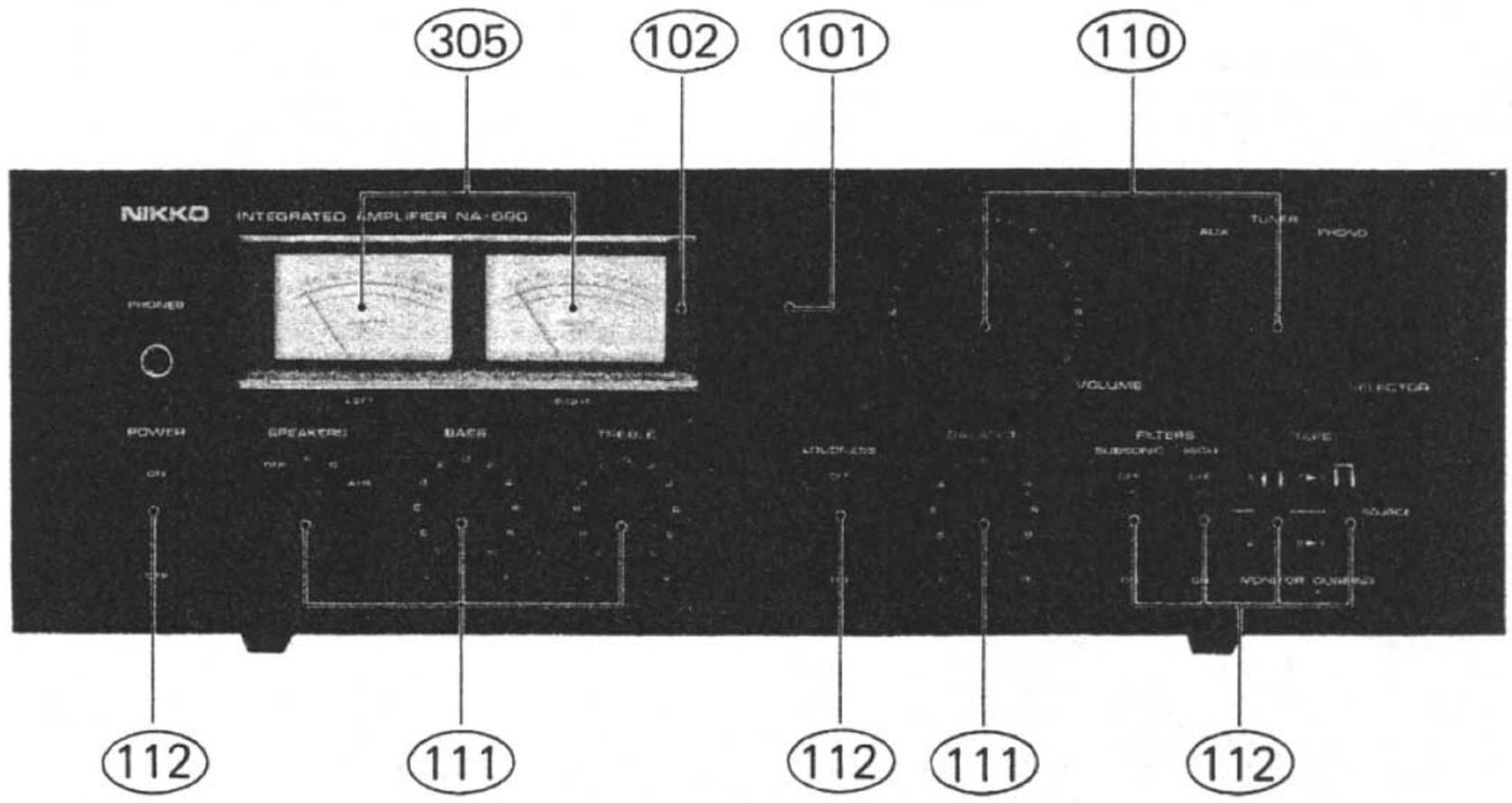

Photo 3

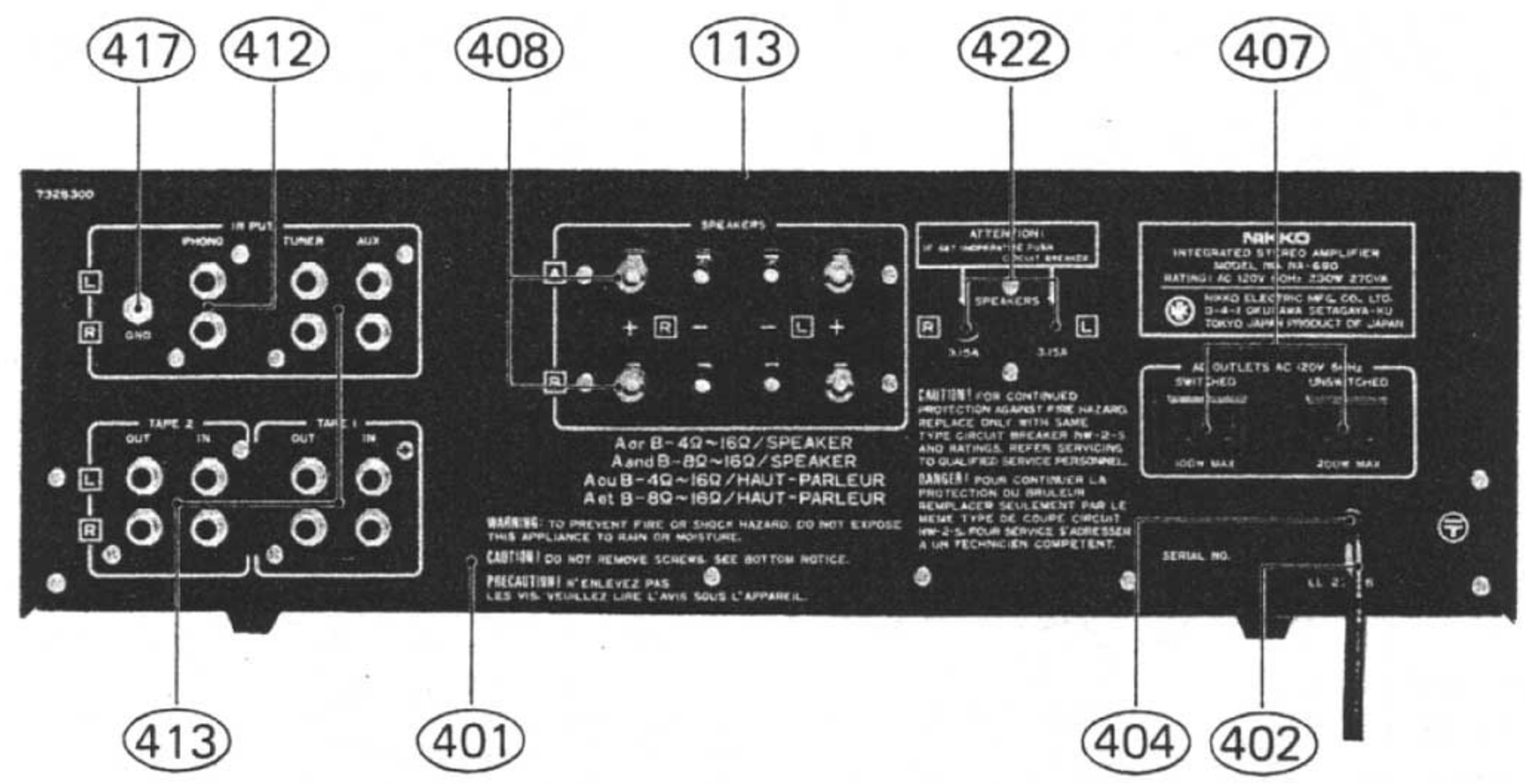

Photo 4

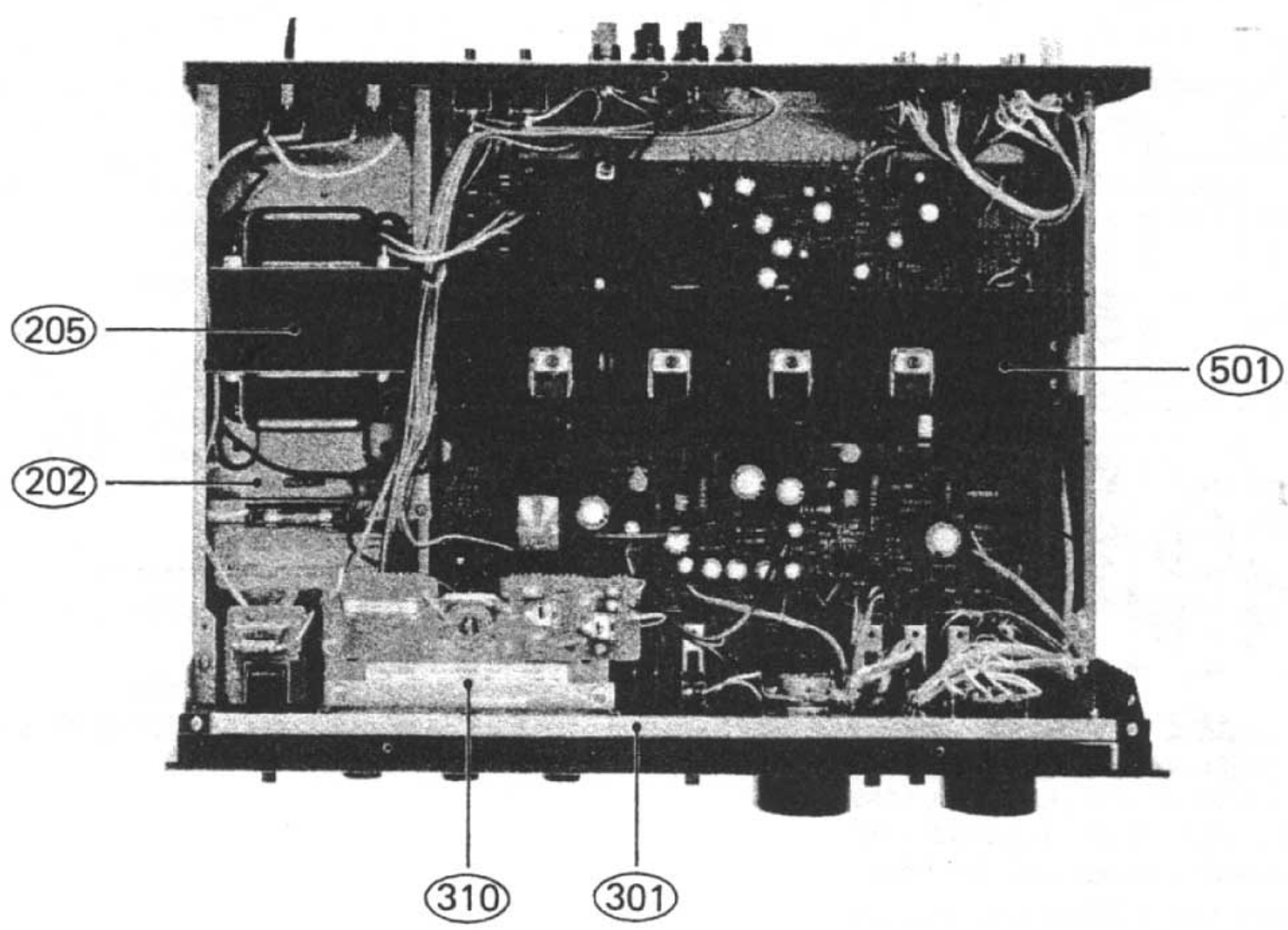

Photo 5

www.hifiengine.com

ALIGNMENT

TEST EQUIPMENT

Allow a minimum of 10 minutes warm-up for test equipment and the amplifier to be tested.

Maintain line voltage.

Generator – Audio Frequency
DC Voltmeter – High Sensitivity
Vacuum Tube Voltmeter
(Oscilloscope)

Connect 8 ohm dummy loads to both L and R channel speaker terminals of the amplifier.

IDLING CURRENT ADJUSTMENT

(See Amp PC Board and Fig. 2)

Idling current is obtained by measuring the voltage of the emitter resistor connected to the power transistor.

Left Channel:

1. Connect DC Voltmeter in accordance with Fig. 2.
2. Apply no signal to the amplifier.
3. Adjust potentiometer HVR701 so that the voltage drop across R751 is 6.6 (or 3.3 to 13.2) millivolts.

Right Channel:

Similarly, adjust potentiometer HVR702 so that the voltage drop across R752 is 6.6 (or 3.3 to 13.2) millivolts.

METER LEVEL ADJUSTMENT

(See Meter Control Circuit Board)

1. Set potentiometers HVR901 and HVR902 to mid-range.
2. Connect Generator to "AUX" of the amplifier.
3. Apply sine wave (1 kHz) to the amplifier.

Left Channel:

1. Set Generator and "VOLUME" to obtain 40 watts (17.9 Volts into 8 ohms load).
2. Adjust potentiometer HVR901 so that the power meter reads 40 watts.

Right Channel:

Similarly, adjust potentiometer HVR902 so that the power meter reads 40 watts.

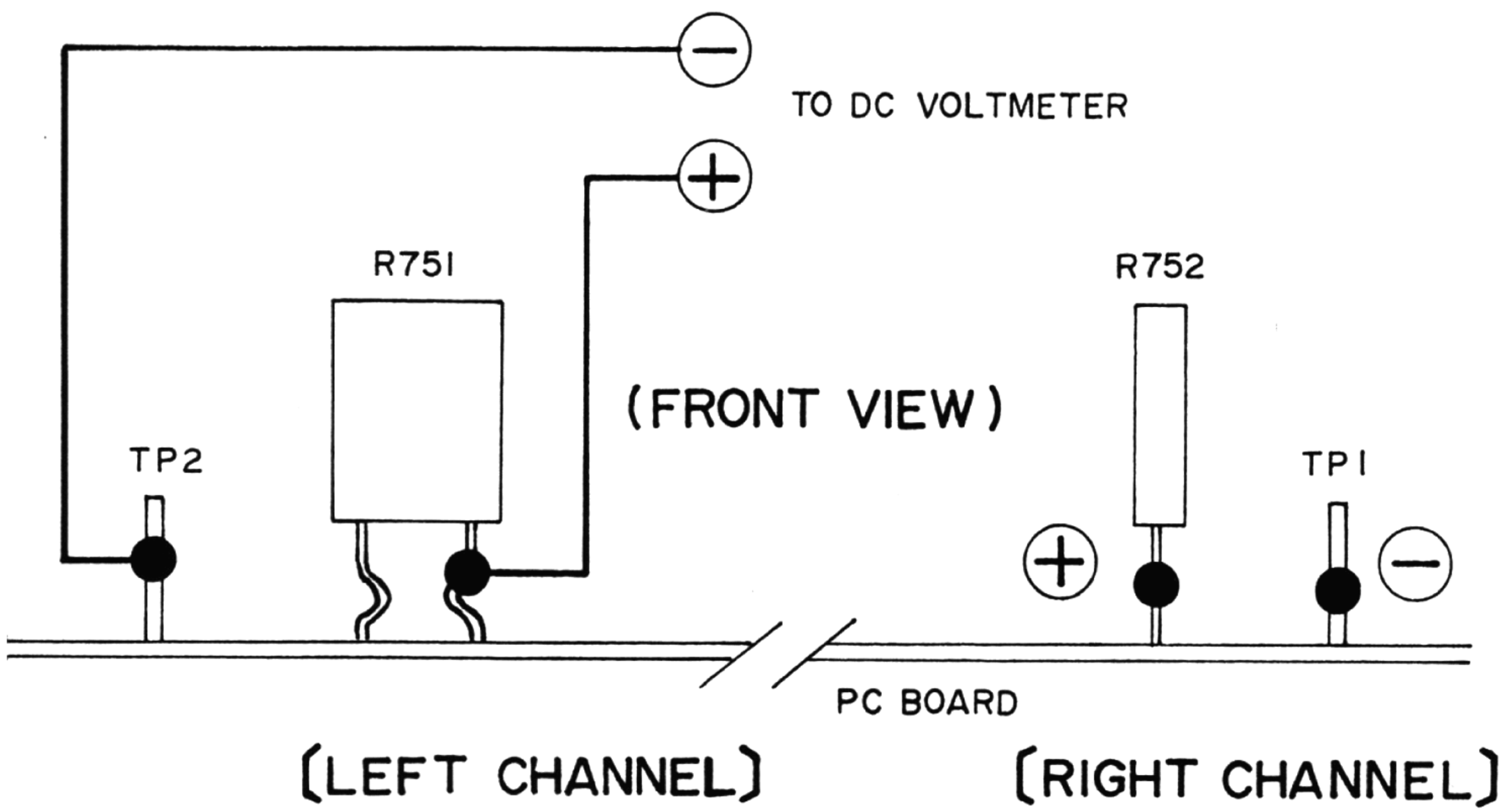

Figure 2

www.hifiengine.com

SCHEMATIC DIAGRAM

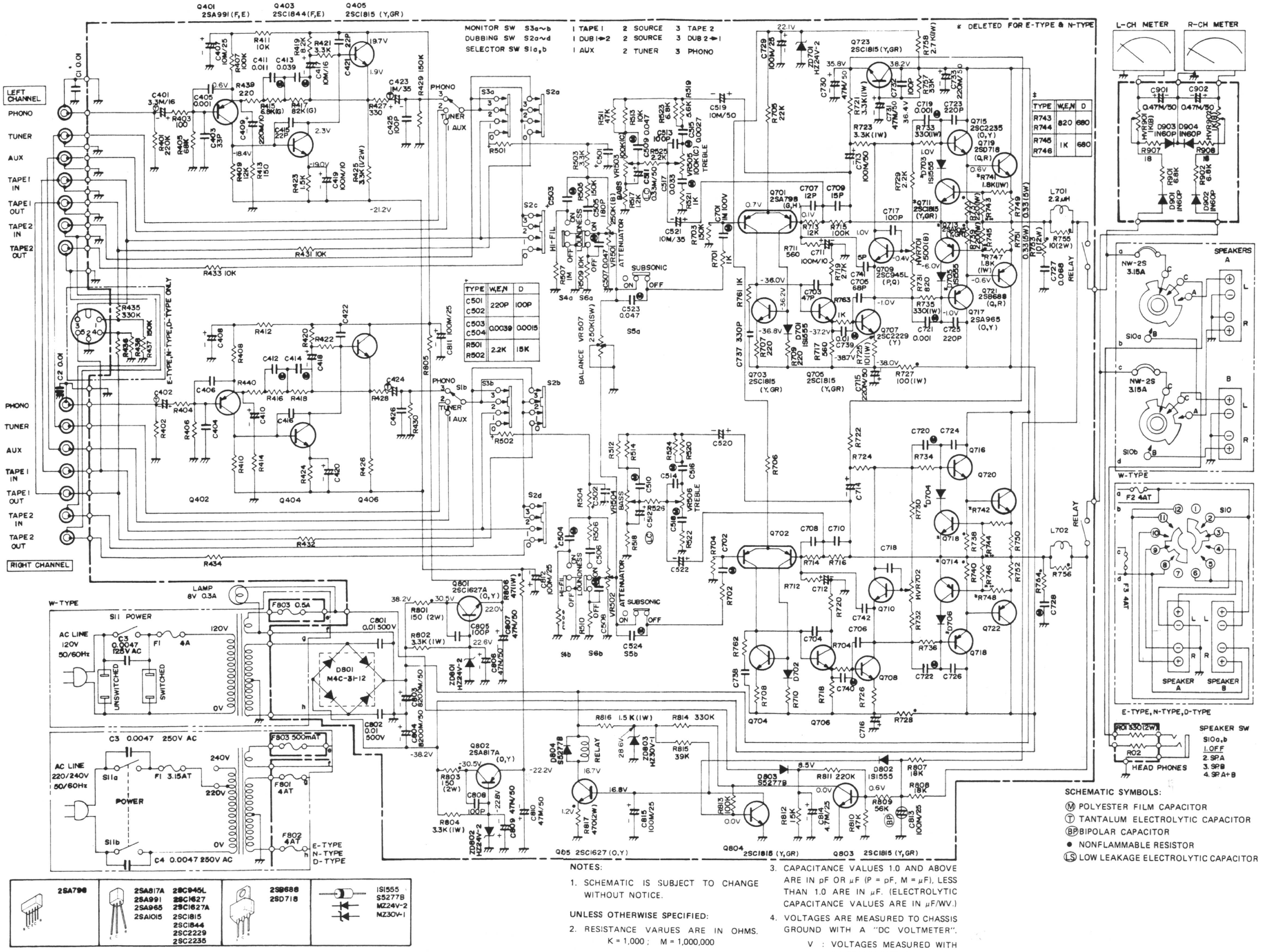

TYPE	W,E,N	D
C501 C502	220P	100P
C503 C504	0.0039	0.0015
R501 R502	2.2K	15K

TYPE	W,E,N	D
R743 R744	820	680
R745 R746	1K	680

SCHEMATIC SYMBOLS:

- Ⓜ POLYESTER FILM CAPACITOR
- Ⓣ TANTALUM ELECTROLYTIC CAPACITOR
- BP BIPOLAR CAPACITOR
- ● NONFLAMMABLE RESISTOR
- LS LOW LEAKAGE ELECTROLYTIC CAPACITOR

NOTES:

1. SCHEMATIC IS SUBJECT TO CHANGE WITHOUT NOTICE.

UNLESS OTHERWISE SPECIFIED:

2. RESISTANCE VARUES ARE IN OHMS. K = 1,000 ; M = 1,000,000
3. CAPACITANCE VALUES 1.0 AND ABOVE ARE IN pF OR μF (P = pF, M = μF), LESS THAN 1.0 ARE IN μF. (ELECTROLYTIC CAPACITANCE VALUES ARE IN μF/WV.)
4. VOLTAGES ARE MEASURED TO CHASSIS GROUND WITH A "DC VOLTMETER".
   V : VOLTAGES MEASURED WITH NO SIGNAL APPLIED.

Figure 3

PC BOARD (BOTTOM VIEW)

WIREING GUIDE

5. (G25) From POWER TRANSFORMER (GRY.)
   To PILOT LAMP (BLK.)
6. From TERMINAL NO. 31 (YEL.)
   To PILOT LAMP (BLK.)
7. (G24) To POWER METERS (BLK.)
8. To CIRCUIT BREAKER R (VIO/WHT.)–W–TYPE only
   To TERMINAL NO. 33 (VIO/WHT.)–E, N, D–TYPE
   To TERMINAL NO. 36 (VIO/WHT.)
9. To CIRCUIT BREAKER L (VIO.)–W–TYPE only
   To TERMINAL NO. 35 (VIO.)–E, N, D–TYPE
   To TERMINAL NO. 39 (VIO.)
10. To VR501 (VOLUME) L (WHT.)
11. (G15) To VR502 (VOLUME) R (CLEAR)
12. To VR502 R (PINK)
13. From VR502 R (PINK)
14. (G11) From VR502 (CLEAR)
15. From VR501 L (WHT.)
16. From VR502 R (PINK)
17. From VR501 L (WHT.)
18. (G10) From VR501 (CLEAR)
19. (G8) To LUG (FRONT PLATE) (CLEAR)
20. (G7) To LUG (FRONT PLATE) (CLEAR)

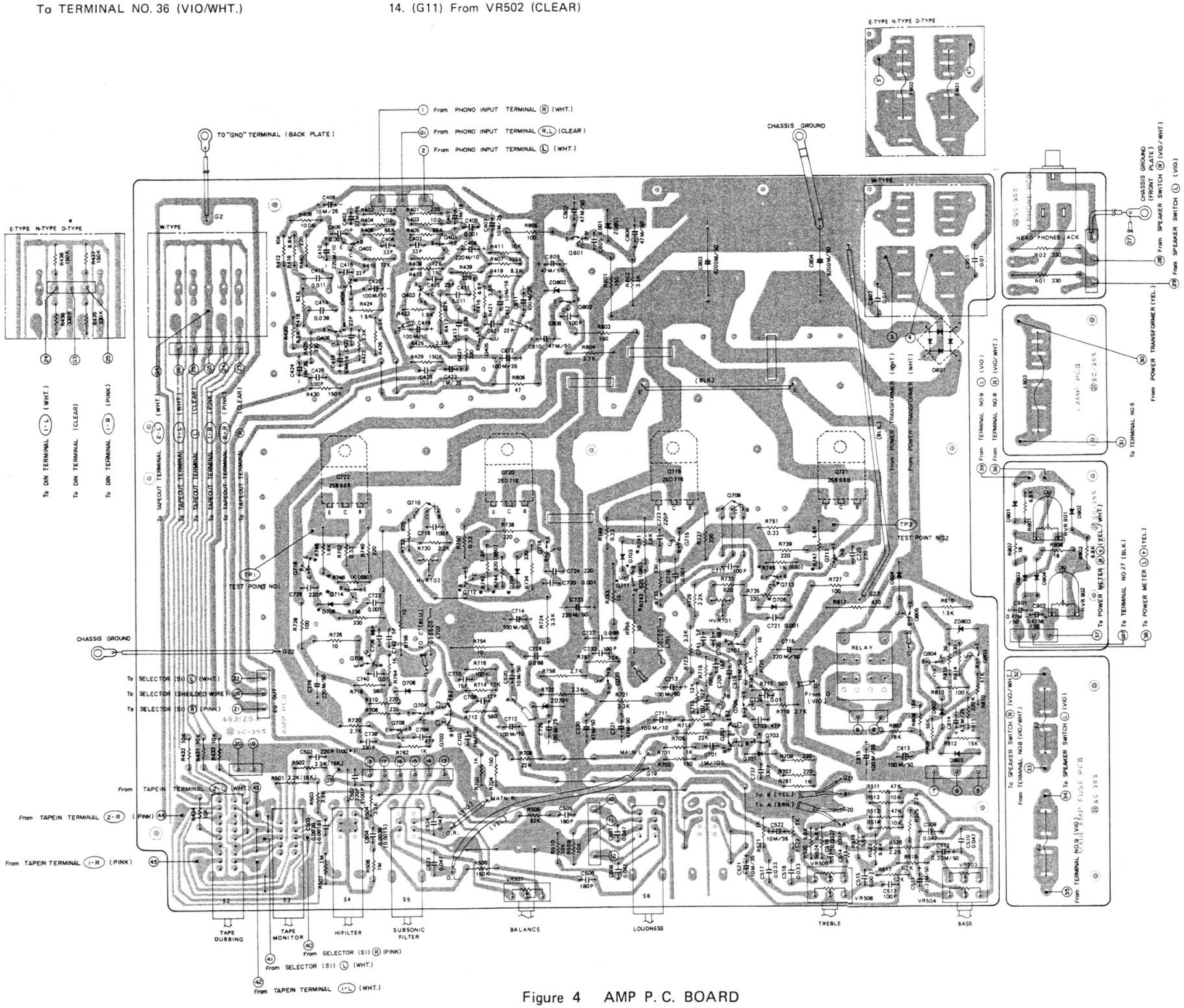

HEAD PHONES PCB

LAMP FUSE PCB

METER CONTROL PCB

POWER AMP FUSE PCB

NOTE: *DELETED IN E–TYPE & N–TYPE
( ) USED IN D–TYPE ONLY.

Figure 4 AMP P. C. BOARD

PARTS LIST

NOTES:

1. ★ The KEY NUMBER (#) marked with a (★) on parts list relate to numbers of three digits with a (◯). (Photo 3 – 5)

2. + Numberals in file indicate the quantity of parts used in one type.

3. ++ TR : Transistor
   FET : Field effect transistor
   VR : Volume control (Variable resistor)
   RES : Carbon film fixed resistor
   MO-RES : Metal oxide film fixed resistor
   CE-RES : Cemented wirewound fixed resistor
   FP : Flame proof
   C-CAP : Ceramic capacitor
   E-CAP : Aluminium electrolytic capacitor
   M-CAP : Polyester film capacitor
   S-CAP : Polystyrene film capacitor
   T-CAP : Tantalum electrolytic capacitor
   BP-CAP : Bipolar electrolytic capacitor
   LC-CAP : Low leakage electrolytic capacitor.

4. Assemblies and parts are subject to change without notice.

5. Parts ordering procedure:
   A. Do NOT USE THE "KEY" NUMBER AND "SYMBOL" NUMBER. (these are control # for the factory only)
   B. Include in any order
      a. Part number.
      b. Part description.
      c. Model number.
      (any of the above lacking from an order may delay shipment of that order.)

KEY NO.	SYMBOL NO.	TYPE+ (W·TYPE, E·TYPE, N·TYPE, D·TYPE)	DESCRIPTION++	PART NO.
			PACKING MATERIALS & ACCESSORIES	
001		1 1 1 1	Carton box	9825440
002		2 2 2 2	Pad	9840770
003		1 1 1 1	Sack, polyethylen cloth	9640550
004		1 1 1 1	Cloth, polishing	9690040
005		1 1 1 –	Sack, polyethylen cloth – # 13	9640320
006a		1 – – –	Manual, instruction – E	960255E
006b		– 1 1 –	Manual, instruction – K	960256K
006c		– – – 1	Manual, instruction – G	960257G
007		– – – 1	Envelope – G	9690170
008a		1 – – –	Service station list	9690180
008b		1 – – –	Card, warranty	967007A
009		1 1 1 1	Drier – Silica gel	9690010
			CABINET ASSEMBLY	
★101a		1 1 1 1	Panel, front – SILVER	7884180
★101b		1 1 1 1	Panel, front – BLACK	7884190
★102		1 1 1 1	Window, meter	7802360
103		2 2 2 2	Guide – 2S, for lever switch	7401610
104		1 1 1 1	Guide – 2T, for lever switch	7401590
105		1 1 1 1	Guide – 3T, for lever switch	7401600
106		4 4 4 4	Screw – 3ϕx8	814308S
107		6 6 6 6	Dust cover, for lever switch	7002000
108		1 1 1 1	Blind plate – FL	7002010
109		1 1 1 1	Blind plate – FU	7002020
★110a		2 2 2 2	Knob – 19SL-42DA – volume/ selector, SILVER	7841290
★111a		4 4 4 4	Knob – 19SL-19DR – bass/treble/ balance/ speaker selector, SILVER	7841250
★112a		6 6 6 6	Knob – 19SL-8LS, for lever switches, SILVER	7841190
★110b		2 2 2 2	Knob – 19BK-42D – volume/ selector, BLACK	7841160
★111b		4 4 4 4	Knob – 19BK-19D – bass/treble/balance/ speaker selector, BLACK	7841140
★112b		6 6 6 6	Knob – 19BK-8LS, for lever switches, BLACK	7841200
★113		1 1 1 1	Cover, metal	7820890
114		6 6 6 6	Screw – TFTS 4ϕx10	887410W
115		6 6 6 6	Washer – 4ϕ	893104W
116		3 3 3 3	Washer – PTS 3ϕx6	893406W
117		1 1 1 1	Plate, bottom	7325260
118		9 9 9 9	Screw – PTS 3ϕx6	814306S
119		4 4 4 4	Foot – 23ϕx12	7401080
120		4 4 4 4	Screw – PTS 3ϕx10	814310S

KEY NO.	SYMBOL NO.	TYPE+ (W·TYPE, E·TYPE, N·TYPE, D·TYPE)	DESCRIPTION++	PART NO.
			CHASSIS ASSEMBLY	
★201		1 1 1 1	Angle, right side	7226710
★202		1 1 1 1	Chassis, for power transformer	7325280
		1 1 1 1	(FRONT PLATE ASSEMBLY)	
203		7 7 7 8	Screw – PTS 3ϕx6	814306S
204		– – – 1	Washer – TW (1) 3ϕ	893403U
★205a		1 – – –	Transformer, power – T-1-334 – 120 V only	1103340
★205b		– 1 1 1	Transformer, power – T-1-335 – 220/240 V class II	1103350
206		4 4 4 4	Screw, tap tite 4ϕx6	7121110
★207		1 1 1 1	Bracket, power transformer	7032080
208		4 4 4 4	Screw – PTS 3ϕx6	814306S
		– 1 1 1	(POWER AMP FUSE PCB ASSEMBLY)	
209		– 2 2 2	Screw – PTS 3ϕx6	814306S
210		1 1 1 1	Lug, GND	4400000
211		1 1 1 1	Screw – PTS 3ϕx6	814306S
212		1 1 1 1	Washer – TW (1) 3ϕ	893403U
213a		1 – – –	Fuse holder – 1P	4581840
213b		– 1 1 1	Fuse holder, midget fuse – 1P	4581430
214		1 – – –	Screw – PTS 3ϕx8	814308S
215		– 1 1 1	Screw – PMS 3ϕx8	810308S
216		– 1 1 1	Washer – IN 3ϕ	892013S
217		– 1 1 1	Washer – TW (1) 3ϕ	893403U
218a		1 – – –	Fuse – 4A 250 V MGC	4700550
218b		– 1 1 1	Midget fuse – (S) 2.5 A 250 V	4720380
			FRONT PLATE ASSEMBLY	
★301		1 1 1 1	Plate, front	7325270
302a		1 – – –	Switch, lever – SDA1L TV-5, – power, spst	4025370
302b		– 1 1 1	Switch, lever – SDE3L class-II – power, dpst	4025380
303		2 2 2 2	Screw – PMS 3ϕx6	810306S
304a	S10	1 – – –	Switch, rotary – SRY 1-2-4 25KC – speaker selector	4050990
304b	S10	– 1 1 1	Switch, rotary – SRY 1-4-4 25 KC – speaker selector	4051200
	S1	1 1 1 1	Switch, rotary – SRY 1-3-3 25 R – input selector	4051220
	VR501 ~ 502	1 1 1 1	VR – GJ70E 250kohm Bx2 25 R – volume	4320880
★305		2 2 2 2	Meter, power – 8ohm	4582390
306		1 1 1 1	Holder, meter	7032190

www.hifiengine.com

PART ORDERING PROCEDURE ----- Do NOT USE THE "KEY" NUMBER AND "SYMBOL" NUMBER. (these are control # for the factory only.) Include in any order: a. Part number, b. Part description, c. Model number. (any of the above lacking from an order may delay shipment of that order.)

KEY NO.	SYMBOL NO.	TYPE+ (W-TYPE E-TYPE N-TYPE D-TYPE)	DESCRIPTION++	PART NO.
307		2 2 2 2	Screw – PTS 3φx6	814306S
		1 1 1 1	(LAMP FUSE PCB ASSEMBLY)	
308		1 1 1 1	Screw – PTS 3φx8	814308S
309		1 1 1 1	Screw – PTS 3φx6	814306S
*310		1 1 1 1	Reflex plate, meter	7401580
311		2 2 2 2	Screw – PTS 3φx10	814310S
312		1 1 1 1	Lamp – 8 V 0.3 A	5808120
313		1 1 1 1	Angle. reflex	7032460
314		1 1 1 1	Panel, meter	7884280
		1 1 1 1	(MATER PCB ASSEMBLY)	
315		2 2 2 2	Screw – PTS 3φx6	814306S
316		1 1 1 1	Lug – 1L3P(L)	441131L
317		1 1 1 1	Screw – PTS 3φx6	814306S
318		1 1 1 1	Washer – TW (1) 3φ	893403U
		1 1 1 1	(HEAD PHONE PCB ASSEMBLY)	
319		2 2 2 2	Screw – PMS 3φx6	810306S
320		1 1 1 1	Lug, ground	4400000
321		1 1 1 1	Washer – TW (1) 3φ	893403U
	C3	1 ---	C-CAP 0.0047uf AC125 V	239472C
	C3,C4	-2 2 2	C-CAP 0.0047uf AC250 V VDE	239472E
322		-2 2 2	Cover, C-CAP 23φ	7400980
			BACK PLATE ASSEMBLY	
401a		1 ---	Plate, back – W	7325300
401b		-1 1 1	Plate, back – E	7325320
*402a		1 ---	Plug/Cord – DP-70	606007A
*402b		-1 1 -	Plug/Cord – CEE-2T	600506J
*402c		---1	Plug/Cord – CEE-2T	600510A
403		---1	Lug, ground	4400000
*404a		1 ---	Stopper, cord – SR-3P-4	7400620
*404b		-1 1 -	Stopper, cord – SR-4N-4	7400690
*404c		---1	Stopper, cord –SR-6W-1	7400740
405		-1 1 1	Bracket, cord – EH	7029800
406		-2 2 2	Screw – PTS 3φx6	814306S
*407		2---	Socket, AC outlet	4500150
408		2 2 2 2	Terminal, speaker – screw type – NK	4450480
409		4 4 4 4	Screw – PTS 3φx8	814308S
410		1 1 1 1	Holder, PCB	7032210
411		2 2 2 2	Screw – PTS 3φx6	814306S
*412		1 1 1 1	Terminal, RCA type pin jack – WP 1Px2	4442020
*413		3 3 3 3	Terminal, TCA type pin jack – WP 2Px2	4444020
414		6 6 6 6	Screw – PTS 3φx8	814308S
415		-1 1 1	Connector, DIN type 5P	4530220
416		-2 2 2	Screw – PTS 3φx6	814306S
	C1,C2	2 2 2 2	C-CAP 0.01uf 80, –20 % 50V YG	231103Z
		1 1 1 1	Lug, ground	4400000
*417		1 1 1 1	Nut, GND terminal	7152060
418		1 1 1 1	Shaft, GND terminal	7152050
419		1 1 1 1	Washer – IN 3φ	892013S
420		1 1 1 1	Washer – TW (1) 3φ	893403U
421		1 1 1 1	Washer – 3φ	893203D
*422		2 ---	Circuit breaker – NW-2S 3.15 A	4900870
423		1 ---	Bracket, circuit breaker – 2P	7030140
424		2 ---	Screw – PTS 3φx6	814306S

KEY NO.	SYMBOL NO.	TYPE+ (W-TYPE E-TYPE N-TYPE D-TYPE)	DESCRIPTION++	PART NO.
			AMP PC BOARD ASSEMBLY	
		1 ---	AMP PCB ASSEMBLY	9441390
		-1 1 -	AMP PCB ASSEMBLY	9441400
		---1	AMP PCB ASSEMBLY	9441410
			(EQ AMP SECTION)	
	Q401,402	2 2 2 2	TR 2SA991 (E or F)	510104S
	Q403,404	2 2 2 2	TR 2SC1844 (E or F)	512106S
	Q405,406	2 2 2 2	TR 2SC1815 (Y or GR)	512107S
	C401,402	2 2 2 2	T-CAP 16D 3.3uf	252213M
	C403,404	2 2 2 2	C-CAP 33pf 10% 50V SL	232330K
	C405,406	2 2 2 2	C-CAP 0.01uf 80, –20% 50V YG	232102Z
	C407,408	2 2 2 2	E-CAP 35R 4.7uf	211415Q
	C409,410	2 2 2 2	E-CAP 10R 220uf	211132Q
	C411,412	2 2 2 2	M-CAP 0.011uf 2 % 50V	228113G
	C413,414	2 2 2 2	M-CAP 0.039uf 2 % 50V	228393G
	C425,416	2 2 2 2	C-CAP 22pf 10% 50V SL	232220K
	C417,418	2 2 2 2	E-CAP 16R 10uf	211220Q
	C419,420	2 2 2 2	E-CAP 10R 100uf	211130Q
	C421,422	2 2 2 2	C-CAP 22pf 10% 50V SL	232220K
	C423,424	2 2 2 2	T-CAP 35D1uf	252410M
	C425,426	2 2 2 2	C-CAP 100pf 10% 50V SL	232101K
	R401,402	2 2 2 2	RES 220kohm 5% ¼W	328224J
	R403,404	2 2 2 2	RES 100ohm 5% ¼W	328101J
	R405,406	2 2 2 2	RES 68kohm 5% ¼W	328683J
	R407,408	2 2 2 2	RES 100kohm 5% ¼W	328104J
	R409,410	2 2 2 2	RES 12kohm 5% ¼W	328123J
	R411,412	2 2 2 2	RES 10kohm 5% ¼W	328103J
	R413,414	2 2 2 2	RES 150ohm 5% ¼W	328151J
	R415,416	2 2 2 2	RES, metal film 6.8kohm 2% ¼W	304682G
	R417,418	2 2 2 2	RES, metal film 82kohm 2% ¼W	304823G
	R419,420	2 2 2 2	RES 8.2kohm 5% ¼W	328822J
	R421,422	2 2 2 2	RES 3.3kohm 5% ¼W	328332J
	R423,424	2 2 2 2	RES 1.5kohm 5% ¼W	328152J
	R425,426	2 2 2 2	RES 3.3kohm 5% ½W	329332J
	R427,428	2 2 2 2	RES 330ohm 5% ¼W	328331J
	R429,430	2 2 2 2	RES 150kohm 5% ¼W	328154J
	R431,432	2 2 2 2	RES 10kohm 5% ¼W	328103J
	R433,434	2 2 2 2	RES 10kohm 5% ¼W	328103J
	R435,436	-2 2 2	RES 330kohm 5% ¼W	328334J
	R437,438	-2 2 2	RES 150kohm 5% ¼W	328154J
	R439,440	2 2 2 2	RES 220ohm 5% ¼W	328221J
			(TONE AMP SECTION)	
	VR503 ~ VR506	2 2 2 2	VR GM70E644C – 100kohm Cx2 – bass/treble	4320860
	VR507	1 1 1 1	VR VM10E126C – 250kohm – balance	4310550
	S2	1 1 1 1	Switch, lever SLR 5-4-3 – tape dubbing	4025310
	S3	1 1 1 1	Switch, lever SLR523 – tape monitor	4025360
	S4 ~ S6	3 3 3 3	Switch, lever SLR 522 – loudness/ subsonic/hi-filter	4025350
	C501,502	2 2 2 -	C-CAP 220pf 10% 50V SL	232221K
	C501,502	---2	C-CAP 100pf 10% 50V SL	232101K
	C503,504	2 2 2 -	M-CAP 0.0039uf 10% 50V	222392K
	C503,504	---2	M-CAP 0.0015uf 10% 50V	222152K
	C505,506	2 2 2 2	C-CAP 180pf 10% 50V SL	232181K
	C507,508	2 2 2 2	M-CAP 0.047uf 10% 50V	222473K
	C509,510	2 2 2 2	M-CAP 0.047uf 10% 50V	222473K
	C511,512	2 2 2 2	LC-CAP 50R 0.33uf 20%	211503L
	C513,514	2 2 2 2	C-CAP 100pf 10% 50V SL	232101K
	C515,516	2 2 2 2	M-CAP 0.0027uf 10% 50V	222272K
	C517,518	2 2 2 2	M-CAP 0.033uf 10% 50V	222333K
	C519,520	2 2 2 2	E-CAP 50R 10uf	211520Q
	C521,522	2 2 2 2	E-CAP 35R 10uf	211420Q

www.hifiengine.com

PART ORDERING PROCEDURE ----- Do NOT USE THE "KEY" NUMBER AND "SYMBOL" NUMBER. (these are control # for the factory only.) Include in any order: a. Part number, b. Part description, c. Model number. (any of the above lacking from an order may delay shipment of that order.)

KEY NO.	SYMBOL NO.	TYPE+ (W-TYPE / E-TYPE / N-TYPE / D-TYPE)	DESCRIPTION++				PART NO.
	C523,524	2 2 2 2	M-CAP 0.047uf	10%	50V		222473K
	R501,502	2 2 2 –	RES 2.2kohm	5%	¼W		328222J
	R501,502	– – – 2	RES 15kohm	5%	¼W		328153J
	R503,504	2 2 2 2	RES 3.3kohm	5%	¼W		328332J
	R505,506	2 2 2 2	RES 82kohm	5%	¼W		328823J
	R507,508	2 2 2 2	RES 1meguohm	5%	¼W		328105J
	R509,510	2 2 2 2	RES 10kohm	5%	¼W		328103J
	R511,512	2 2 2 2	RES 47ohm	5%	¼W		328473J
	R513,514	2 2 2 2	RES 10kohm	5%	¼W		328103J
	R517,518	2 2 2 2	RES 1.2kohm	5%	¼W		328122J
	R519,520	2 2 2 2	RES 5.6kohm	5%	¼W		328562J
	R521,522	2 2 2 2	RES 1kohm	5%	¼W		328102J
			(POWER AMP SECTION)				
★501		1 1 1 1	Heat sink				7082080
502		2 2 2 2	Screw – PTS 3φx6				814306S
	Q701,702	2 2 2 2	TR 2SA798 (G or H)				514086S
	Q703 ~ Q706	4 4 4 4	TR 2SC1815 (Y or GR)				512107S
	Q707,708	2 2 2 2	TR 2SC2229 (Y)				512108S
	Q709,710	2 2 2 2	TR 2SC945L (P or Q)				515077S
	Q711,712	2 – – 2	TR 2SC1815 (Y or GR)				512107S
	Q713,714	2 – – 2	TR 2SA1015 (Y or GR)				510102S
	Q715,716	2 2 2 2	TR 2SC2235 (O or Y)				512109S
	Q717,718	2 2 2 2	TR 2SA965 (O or Y)				510105S
	Q719,720	2 2 2 2	TR 2SD718 (O)				513105S
	Q721,722	2 2 2 2	TR 2SB688 (O)				511105S
	Q723	1 1 1 1	TR 2SC1815 (Y or GR)				512107S
	D701 ~ D706	6 2 2 6	Diode 1S1555				501021S
	ZD701	1 1 1 1	Zener Diode HZ24V-2				502053S
	L701,702	2 2 2 2	Coil, choke – 15T 2.2uh				1210940
	C701,702	2 2 2 2	M-CAP 1uf	10%	100V		282105K
	C703,704	2 2 2 2	C-CAP 47pf	10%	50V	SL	232470K
	C705,706	2 2 2 2	C-CAP 68pf	10%	50V	SL	232680K
	C707,708	2 2 2 2	C-CAP 12pf	10%	50V	SL	232120K
	C709,710	2 2 2 2	C-CAP 15pf	10%	50V	SL	232150K
	C711,712	2 2 2 2	E-CAP 10R 100uf				211130Q
	C713,714	2 2 2 2	E-CAP 50R 100uf				211530Q
	C715,716	2 2 2 2	E-CAP 50R 220uf				211532Q
	C717,718	2 2 2 2	C-CAP 100pf	10%	50V	SL	232101K
	C719,720	2 2 2 2	M-CAP 0.001uf	10%	50V		222102K
	C721,722	2 2 2 2	M-CAP 0.001uf	10%	50V		222102K
	C723,724	2 2 2 2	C-CAP 220pf	10%	50V	SL	232221K
	C725,726	2 2 2 2	C-CAP 220pf	10%	50V	SL	232221K
	C727,728	2 2 2 2	M-CAP 0.068uf	10%	50V		222683K
	C729	1 1 1 1	E-CAP 25R 100uf				211330Q
	C730,731	2 2 2 2	E-CAP 50R 47uf				211525Q
	C732	1 1 1 1	C-CAP 100pf	10%	50V	SL	232101K
	C733	1 1 1 1	E-CAP 50R 220uf				211532Q
	C735,736	2 2 2 2	C-CAP 68pf	10%	50V	SL	232680K
	C737,738	2 2 2 2	C-CAP 330pf	10%	50V	SL	232331K
	C739,740	2 2 2 2	M-CAP 0.01uf	10%	50V		222103K
	C741,742	2 2 2 2	C-CAP 5pf	10%	50V	SL	232509K
	HV701, HV702	2 2 2 2	Potentiometer – HVR B500ohm				4300830
	R701,702	2 2 2 2	RES 1kohm	5%	¼W		328102J
	R703,704	2 2 2 2	RES 150kohm	5%	¼W		328154J
	R705,706	2 2 2 2	RES 22kohm	5%	¼W		328223J
	R707,708	2 2 2 2	RES 220ohm	5%	¼W		328221J
	R709,710	2 2 2 2	RES 220ohm	5%	¼W		328221J
	R711,712	2 2 2 2	RES 560ohm	5%	¼W		328561J
	R713,714	2 2 2 2	RES 12kohm	5%	¼W		328123J
	R715,716	2 2 2 2	RES 100kohm	5%	¼W		328104J
	R717,718	2 2 2 2	RES 560ohm	5%	¼W		328561J
	R719,720	2 2 2 2	RES 2.7kohm	5%	¼W		328272J
	R721,722	2 2 2 2	MO-RES 3.3kohm	5%	1W		361332B
	R723,724	2 2 2 2	MO-RES 3.3kohm	5%	1W		361332B

KEY NO.	SYMBOL NO.	TYPE+ (W-TYPE / E-TYPE / N-TYPE / D-TYPE)	DESCRIPTION++				PART NO.
	R725,726	2 2 2 2	MO-RES 10ohm	5%	1W		361100B
	R727,728	2 2 2 2	FP-MO-RES 100ohm	5%	1W		361101L
	R729,730	2 2 2 2	RES 2.2kohm	5%	¼W		328222J
	R731,732	2 2 2 2	RES 820ohm	5%	¼W		328821J
	R733,734	2 2 2 2	MO-RES 330ohm	5%	1W		361331B
	R735,736	2 2 2 2	MO-RES 330ohm	5%	1W		361331B
	R737,738	2 2 2 2	FP-MO-RES 220ohm	5%	1W		361221L
	R739,740	2 2 2 2	FP-MO-RES 220ohm	5%	1W		361221L
	R741,742	2 – – 2	MO-RES 1.8kohm	5%	1W		361182B
	R743,744	2 – – –	RES 820ohm	5%	¼W		328821J
	R743,744	– – – 2	RES 680ohm	5%	¼W		328681J
	R745,746	2 – – –	RES 1kohm	5%	¼W		328102J
	R745,746	– – – 2	RES 680ohm	5%	¼W		328681J
	R747,748	2 – – 2	MO-RES 1.8kohm	5%	1W		361182B
	R749,750	2 2 2 2	CEM-RES 0.33ohm	5%	5W		384339W
	R751,752	2 2 2 2	CEM-RES 0.33ohm	5%	5W		384339W
	R753,754	2 2 2 2	FP-MO-RES 10ohm	5%	2W		362100L
	R755,756	2 2 2 2	FP-MO-RES 10ohm	5%	2W		362100L
	R757	1 1 1 1	RES 33kohm	5%	¼W		328333J
	R758	1 1 1 1	MO-RES 2.7kohm	5%	1W		361272B
	R759,760	2 2 2 2	RES 820ohm	5%	¼W		328821J
	R761,762	2 2 2 2	RES 1kohm	5%	¼W		328102J
	R763,764	2 2 2 2	RES 1kohm	5%	¼W		328102J
			(REGULATOR SECTION)				
	Q801	1 1 1 1	TR 2SC1627A (O or Y)				512101S
	Q802	1 1 1 1	TR 2SA817A (O or Y)				510101S
	Q803,804	2 2 2 2	TR 2SC1815 (Y or GR)				512107S
	Q805	1 1 1 1	TR 2SC1627 (O or Y)				511017S
	D801	1 1 1 1	Diode M4C-31-12				560055S
	D802	1 1 1 1	Diode 1S1555				501021S
	D803,804	2 2 2 2	Diode S5277B				560046S
	ZD801,802	2 2 2 2	Zener Diode HZ24V-2				502053S
	ZD803	1 1 1 1	Zener Diode HZ30V-1				502054S
		1 1 1 1	Relay FRL-264 DC24V				1700230
	F801,802	– 2 2 2	Midget fuse – (S) 4AT 250 V				4720400
		– 4 4 4	Holder, midget fuse				7050430
	C801,802	2 2 2 2	C-CAP 0.01uf 100, –0 %		500V		238103P
	C803,804	2 2 2 2	E-CAP 50T8200uf				212548P
	C805	1 1 1 1	C-CAP 100pf	10%	50V	SL	232101K
	C806,807	2 2 2 2	E-CAP 50R 47uf				211525Q
	C808	1 1 1 1	C-CAP 100pf	10%	50V	SL	232101K
	C809,810	2 2 2 2	E-CAP 50R 47uf				211525Q
	C811,812	2 2 2 2	E-CAP 25R 100uf				211330Q
	C813	1 1 1 1	BP-CAP 25R 100uf				215330N
	C814	1 1 1 1	E-CAP 35R 4.7uf				211415Q
	C815	1 1 1 1	E-CAP 25R 100uf				211330Q
	R801	1 1 1 1	FP-MO-RES 150ohm	5%	2W		362151L
	R802	1 1 1 1	MO-RES 3.3kohm	5%	1W		361332B
	R803	1 1 1 1	FP-MO-RES 150ohm	5%	2W		362151L
	R804	1 1 1 1	MO-RES 3.3kohm	5%	1W		361332B
	R805	1 1 1 1	FP-MO-RES 100ohm	5%	1W		361101L
	R806	1 1 1 1	FP-MO-RES 470ohm	5%	1W		361470L
	R807,808	2 2 2 2	RES 18kohm	5%	¼W		328183J
	R809	1 1 1 1	RES 56kohm	5%	¼W		328563J
	R810	1 1 1 1	RES 47kohm	5%	¼W		328473J
	R811	1 1 1 1	RES 220kohm	5%	¼W		328224J
	R812	1 1 1 1	RES 15kohm	5%	¼W		328153J
	R813	1 1 1 1	RES 100kohm	5%	¼W		328104J
	R814	1 1 1 1	RES 330kohm	5%	¼W		328334J
	R815	1 1 1 1	RES 39kohm	5%	¼W		328393J
	R816	1 1 1 1	MO-RES 3.3kohm	5%	1W		361332B
	R817	1 1 1 1	FP-MO-RES 470ohm	5%	2W		362471L

www.hifiengine.com

PART ORDERING PROCEDURE ····· Do NOT USE THE "KEY" NUMBER AND "SYMBOL" NUMBER. (these are control # for the factory only.) Include in any order: a. Part number, b. Part description, c. Model number. (any of the above lacking from an order may delay shipment of that order.)

KEY NO.	SYMBOL NO.	TYPE+ W-TYPE E-TYPE N-TYPE D-TYPE	DESCRIPTION++	PART NO.
			METER PCB ASSEMBLY	
	D901 ~ D904	4 4 4 4	Diode 1N60P	500001G
	C901,902	2 2 2 2	E-CAP 50R 0.47uf	211505Q
	HVR901, HVR902	2 2 2 2	Potentiometer – HVR EVL-S6A 1kohm	4301120
	R901,902	2 2 2 2	RES 6.8kohm 5% ¼W	328682J
	R907,908	2 2 2 2	RES 18ohm 5% ¼W	328180J
			HEAD PHONES PCB ASSEMBLY	
		1 1 1 1	Jack, head phones – JL3A	4550260
	R01,02	1 1 1 1	MO-RES 330ohm 5% ¼W	362331B

KEY NO.	SYMBOL NO.	TYPE+ W-TYPE E-TYPE N-TYPE D-TYPE	DESCRIPTION++	PART NO.
			LAMP FUSE PCB ASSEMBLY	
	F803	1 – – –	Fuse – 0.5 A 250 V MGC	4700560
	F803	– 1 1 1	Midget fuse – (S) 500 mAT 250 V	4720310
		2 – – –	Fuse holder	7050420
		– 2 2 2	Fuse holder, midget fuse	7050430
			POWER AMP FUSE PCB ASSEMBLY	
	F2,3	– 2 2 2	Midget fuse – (S) 4 AT 250 V	4720400
		– 4 4 4	Fuse holder, midget fuse	7050430

www.hifiengine.com

SEMICONDUCTOR DATA

TRANSISTORS

† NOTES

Ge: Germanium
Si: Sillicon

A: Alloy
B: Base
D: Diffused
Dd: Double-diffused

Df: Drift-field
E: Epitaxial
G: Grown
J: Junction

M: Mesa
P: Planer
Pc: Point-contact
Td: Triple-diffused

DEVICE TYPE	APPLICATIONS	STRUCTURE†	MAXIMUM RATINGS Absolute-Maximum Values: (T_A = 25°C unless otherwise specified)					ELECTRICAL CHARACTERISTICS Typical Values: (T_A = 25°C unless otherwise specified)													MANUFACTURER
			Collector-to-Base Voltage V_{CBO} (V)	Emitter-to-Base Voltage V_{EBO} (V)	Collector Current I_C (mA)	Collector Dissipation P_C (mW)	Junction Temperature T_J (°C)	Collector Cutoff Current I_{CBO} (uA)	V_{CB} (V)	Static Forward-Current Transfer Ratio h_{FE}	V_{CE} (V)	I_C (mA)	Collector-Emitter Saturation Voltage $V_{CE(sat)}$ (V)	I_C (mA)	I_B (mA)	Gain-Bandwidth Product f_T f_{ob}* (MHz)	V_{CE} V_{CB}* (V)	I_E I_C* (mA)	Output Capacitance C_{ob} (pF)	Others	
2SA798(G, H)	AF: Low noise differential amp.	PNP, Si-E Dual Tr.	−70	−5	−100	200	125	0.1	−35	400 ~ 800	−6	−1	−0.6 max.	−10	−1	100	−6	−1*	3		MITSUBISHI
2SA817A (O, Y)	AF: Driver	PNP Si-E	−80	−5	−300	600	150	0.1	−50	70 ~ 240	−2	−50	−0.4 max.	−200	−20	100	−10	−10*	14		TOSHIBA
2SA965 (O, Y)	AF: Power amp. Driver	PNP Si-E (PCT)	−120	−5	−800	900	150	0.1	−120	80 ~ 240	−5	−100	−1.0 max.	−500	−50				30		TOSHIBA
2SA991 (F, E)	AF: Low noise amp.	PNP Si-E	−60	−5	−100	500	125	−0.05	−60	300 ~ 800	−6	−1	−0.5 max.	−100	−10	90	−6	1	5.5		N E C
2SA1015 (Y)	AF	PNP Si-E (PCT)	−50	−5	−150	400	125	−0.1	−50	120 ~ 240	−6	−2	−0.3 max.	−100	−10	80 min.	−10	1	7 max.		TOSHIBA
2SB688 (O)	AF: Power amp.	PNP Si-Td	−120	−5	−8.0A	80W (Tc=25°C)	150	−10	−120	80 ~ 160	−5	−1.0A	−2.5 max.	−5.0A	−500						TOSHIBA
2SC945L (P, Q)	AF: Low noise general amp.	NPN Si-E	60	5	100	250	125	0.1	60	135 ~ 400	6	1	0.15	100	10	250	6	−10	3.5		N E C
2SC1627 (O, Y)	AF: Driver	NPN Si-E	80	5	300	600	150	0.1	50	70 ~ 240	2	50	0.5 max.	200	10	100	10	10*	10		TOSHIBA
2SC1627A (O, Y)	AF: Driver	NPN Si-E	80	5	400	800	150	0.1	50	70 ~ 240	2	50	0.4 max.	200	20	100	10	10*	10		TOSHIBA
2SC1815 (Y, GR)	RF, AF	NPN Si-E (PCT)	60	5	150	400	125	0.1	60	120 ~ 400	6	2	0.25 max.	100	10	80 min.	10	1*	3.5 max.		TOSHIBA
2SC1844 (F, E)	AF: Low noise amp.	NPN Si-E	60	5	100	500	125	0.05	60	400 ~ 600	6	1	0.1	100	10	100	6	1*	4.8		N E C
2SC2229 (Y)	AF: Driver	NPN Si-Td	200	5	50	800	150	0.1	200	120 ~ 240	5	10	0.5 max.	10	1				5		TOSHIBA
2SC2235 (O, Y)	AF: Power amp. Driver	NPN Si-E (PCT)	120	5	800	900	150	0.1	120	80 ~ 240	5	100	1.0 max.	500	50				30		TOSHIBA
2SD718 (O)	AF: Power amp.	NPN Si-Td	120	5	8.0A	80W (Tc=25°C)	150	0.1	120	80 ~ 160	5	1.0A	2.5 max.	5.0A	500						TOSHIBA

DIODES, LEDS

DEVICE TYPE	APPLICATIONS	STRUCTURE†	MAXIMUM RATINGS Absolute-Maximum Values: (T_A = 25°C unless otherwise specified)									ELECTRICAL CHARACTERISTICS Typical Values: (T_A = 25°C unless otherwise specified)							MANUFACTURER
			Reverse Surge Voltage V_{Rsurge} (V)	Peak Reverse Voltage V_{RM} (V)	Reverse Voltage V_R (V)	Peak Forward Voltage V_{FM} (V)	Peak Forward Current I_{FM} (mA)	Average Rectified Current I_O (mA)	Forward Surge Current $I_{F\,surge}$ (A)	Junction Temperature T_J (°C)	Total Power Dissipation P_D (mW)	Forward Current I_{Fmin} (mA)	Test Condition V_F (V)	Forward Voltage V_{Fmax} (V)	Test Condition I_F (mA)	Reverse Current I_{Rmax} (uA)	Test Condition V_R (V)	Others	
1N60P	Detector	Ge-Pc		35	25		150	50	0.5	70				1	4	75	10		HITACHI
1S1555	Detector	Si-EP		35	30		300	100	1	150	300			1.4	0.1	0.5	30		TOSHIBA
M4C-31-12	Rectifier	Si-DJ, Bridge	300	200	70			3.0A (Ta=30°C)	150	150				0.95	2.0A	50	200		HITACHI
S52778	Rectifier	Si-DJ		100			2.0A	1.0A	50	150				1.2	1.0A	10	100		TOSHIBA

ZENER DIODES

DEVICE TYPE	APPLICATIONS	STRUCTURE†	MAXIMUM RATINGS Absolute-Maximum Values: (T_A = 25°C unless otherwise specified)			ELECTRICAL CHARACTERISTICS Typical Values: (T_A = 25°C unless otherwise specified)													MANUFACTURER
			Total Power Dissipation P_D (mW)	Zener Current I_Z (A)	Junction Temperature T_J (°C)	Zener Voltage V_Z MIN (V)	TYP (V)	MAX (V)	Test Conditions I_Z (mA)	Differential Resistance r_Z TYP (Ω)	MAX (Ω)	Test Conditions I_Z (mA)	Temperature Coefficient γ_Z TYP (%/°C)	MAX (%/°C)	Test Conditions I_Z (mA)	Reverse Current I_Z MAX (μA)	Test Conditions V_R (V)	Others	
HZ24V-2	Stabilized power supply	Si-EP	500	0.2	175	23.6		24.7	2		70	2	20.3 mV/°C		2				HITACHI
HZ30V-1	Stabilized power supply	Si-EP	500	0.2	175	28.2		29.6	2		100	2	28.3 mV/°C		2				HITACHI

www.hifiengine.com

NIKKO ELECTRIC MFG. CO., LTD.
HEAD OFFICE
4-1, Okusawa 3-chome, Setagaya-ku, Tokyo 158, Japan
SALES OFFICE
Mitsubishi Bank Bldg., 3-2, Dogenzaka 1-chome
Shibuya-ku, Tokyo 150, Japan

Nikko Audio OF AMERICA
HEAD OFFICE
16270 Raymer St., Van Nuys, Ca. 91406, U.S.A.
NY OFFICE
320 Oser Ave., Hauppauge, N.Y 11785, U.S.A.

965174E 79. April 1,200

www.hifiengine.com